YANMAR

PARTS CATALOG

0CD50-M01130EN

Last update May., 2021

PREFACE

This parts catalog is the 1st edition of 3TNM74F-SAAY for AMT Pump.

Published : April, 2015

Contents

0CD50-M01130

Fig. No.	Fig. Name
3TNM74F-SAAY	
1.	CYLINDER BLOCK
2.	GEAR HOUSING
3.	FLYWHEEL HOUSING & OIL SUMP
4.	CYLINDER HEAD & BONNET
5.	EXHAUST MANIFOLD
6.	CAMSHAFT & DRIVING GEAR
7.	CRANKSHAFT & PISTON
8.	LUB. OIL SYSTEM
9.	COOLING WATER SYSTEM
10.	FUEL INJECTION PUMP
11.	GOVERNOR
12.	FUEL INJECTION VALVE
13.	FUEL PIPE
14.	STARTER MOTOR
15.	GENERATOR

Fig.1. CYLINDER BLOCK

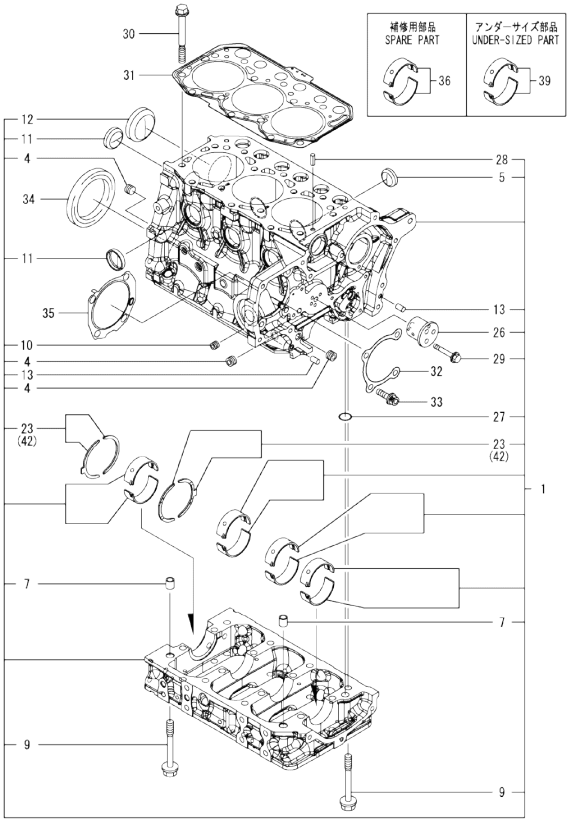

Remarks
(1)Spare parts.
(2)Under-sized(U.S.=0.25) parts.
(3)Over-sized(O.S.=0.25) parts.

(A)=3TNM74F-SAAY (D)=
(B)= (E)=
(C)= (F)=

No.	Lev.	Parts No.	Description	Q'ty (A)	(B)	(C)	(D)	(E)	(F)	I	R
1	1	119D00-01560	BLOCK ASSY, CYLINDER	1							
4	2	124060-01050	PLUG, PT1/8	3							
5	2	119125-01970	PLUG, CUP TYPE 25	3							
7	2	119125-01960	PIPE, DOWEL L=12	2							
9	2	119125-02061	BOLT, METAL CAP	16							
10	2	23876-005000	PLUG, R005	1							
11	2	27241-300000	PLUG 30	4							
12	2	27241-450000	PLUG, 45	1							
13	2	119620-01620	PIN, PARALLEL M6X10	2							
23	2	119125-02930	BEARING ASSY, THRUST	2							
26	2	119125-25050	SHAFT, IDLE GEAR	1							
27	2	129900-32040	O-RING, P14	1							
28	2	22351-060012	PIN, SPRING 6.0X12	2							
29	2	26106-060402	BOLT, M6X 40 PLATED	3							
30	1	119810-01200	BOLT, CYLINDER HEAD	14							
31	1	119C10-01330	GASKET, HEAD	1							
32	1	119125-01790	GASKET	1							
33	1	119125-01800	BOLT, FLANGE M8X25	4							
34	1	119734-02220	SEAL, OIL	1							
35	1	119125-51800	GASKET	1							
36	1	119125-02900	BEARING ASSY, MAIN	4							1
39	1	119125-02910	BEARING ASSY, MAIN	4							2
42	1	119125-02940	BEARING, THRUST 0.25	2							3

N:Old ←Yes/No→ New. Q:Old ←No/Yes→ New. R:Old ←Yes/Yes→ New. S:Old ←No/No→ New. W:Add. Z:Discontinued. F:Interchangeable by set. K:Q'ty Change

Copyright (C) 2015 YANMAR GLOBAL CS CO., LTD. All RightsReserved.

Fig.2. GEAR HOUSING

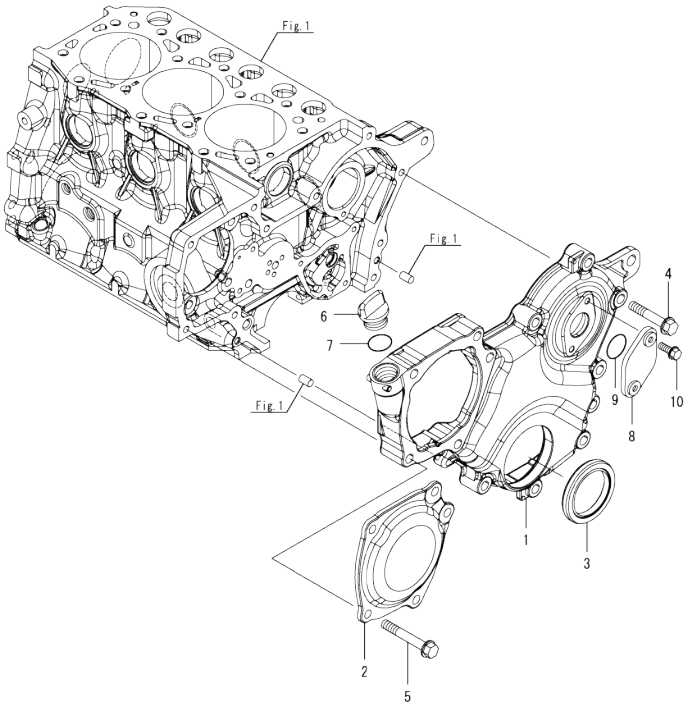

(A)=3TNM74F-SAAY (D)=
(B)= (E)=
(C)= (F)=

No.	Lev.	Parts No.	Description	Q'ty (A)	(B)	(C)	(D)	(E)	(F)	I	R
1	1	119025-01530	CASE, GEAR	1							
2	1	119125-01750	COVER, PUMP	1							
3	1	119717-01800	SEAL, OIL	1							
4	1	26106-080352	BOLT, M8X 35 PLATED	8							
5	1	26106-080452	BOLT, M8X 45 PLATED	5							
6	1	106760-01770	CAP, FILLER	1							
7	1	24311-000180	O-RING, 1AP18.0	1							
8	1	121023-01551	COVER	1							
9	1	24341-000240	O-RING, 1AS24.0	1							
10	1	26106-060162	BOLT, M6X 16 PLATED	2							

N:Old ←Yes/No→ New. Q:Old ←No/Yes→ New, R:Old ←Yes/Yes→ New. S:Old ←No/No→ New. W:Add. Z:Discontinued. F:Interchangeable by set. K:Q'ty Change

Copyright (C) 2015 YANMAR GLOBAL CS CO., LTD. All RightsReserved.

Fig.3. FLYWHEEL HOUSING & OIL SUMP

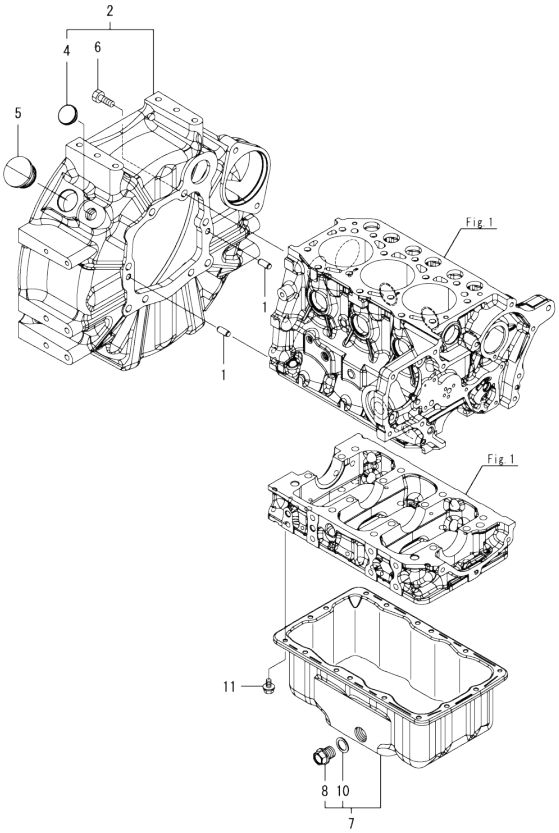

(A)=3TNM74F-SAAY
(B)=
(C)=
(D)=
(E)=
(F)=

No.	Lev.	Parts No.	Description	Q'ty (A)	(B)	(C)	(D)	(E)	(F)	I	R
1	1	129100-01580	PIN, PARALLEL 8X16	2							
2	1	119D00-01610	HOUSING ASSY, WHEEL	1							
4	2	119888-01850	PLUG, RUBBER	1							
5	1	119620-01750	CAP	1							
6	1	26206-100252	BOLT, M10X 25 PLATED	8							
7	1	119025-01770	SUMP ASSY, OIL	1							
8	2	105425-01690	PLUG, M16	1							
10	2	22190-160002	WASHER, SEAL 16	1							
11	1	119125-01780	BOLT, TORX M6X10	16							

N:Old ◄Yes/No► New. Q:Old ◄No/Yes► New. R:Old ◄Yes/Yes► New. S:Old ◄No/No► New. W:Add. Z:Discontinued. F:Interchangeable by set. K:Q'ty Change

Copyright (C) 2015 YANMAR GLOBAL CS CO., LTD. All RightsReserved.

Fig.4. CYLINDER HEAD & BONNET

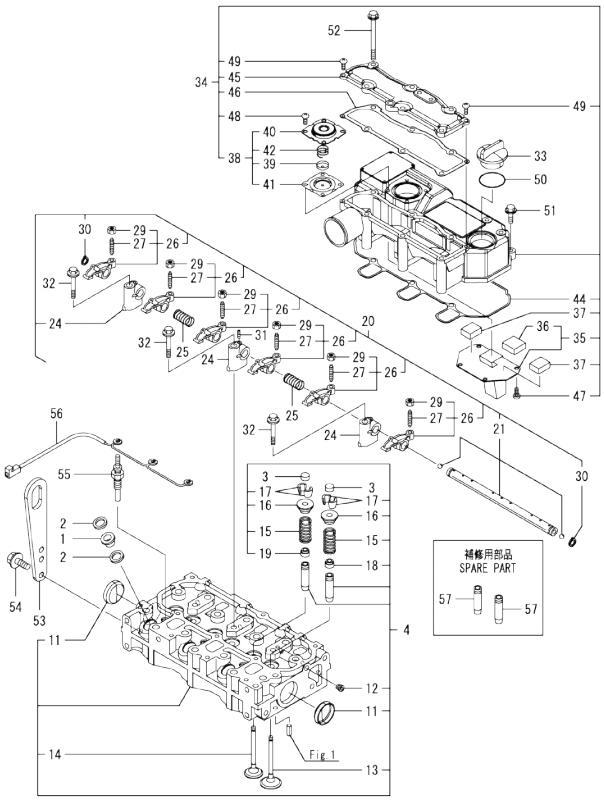

(A)=3TNM74F-SAAY
(B)=
(C)=
(D)=
(E)=
(F)=

No.	Lev.	Parts No.	Description	Q'ty (A)	(B)	(C)	(D)	(E)	(F)	I	R
1	1	129901-11450	PROTECTOR, NOZZLE	3							
2	1	119600-11460	GASKET, NOZZLE	6							
3	1	105010-11490	CAP, VALVE	6							
4	1	119D00-11750	HEAD ASSY, CYLINDER	1							
11	2	119285-11990	PLUG, CUP TYPE 35	2							
12	2	23876-005000	PLUG, R005	1							
13	2	119C10-11100	VALVE, SUCTION	3							
14	2	119C10-11110	VALVE, EXHAUST	3							
15	2	119717-11131	SPRING, VALVE	6							
16	2	129508-11180	RETAINER, SPRING	6							
17	2	119717-11190	COTTER, VALVE	12							
18	2	119717-11340	SEAL, VALVE STEM	3							
19	2	119717-11350	SEAL, VALVE STEM	3							
20	1	119515-11200	SUPPORT ASSY, ROCKER	1							
21	2	119515-11240	SHAFT ASSY, ROCKER	1							
24	2	119717-11260	SUPPORT, ROCKER ARM	3							
25	2	119515-11280	SPRING, ROCKER	2							
26	2	119717-11650	ARM ASSY, ROCKER	6							
27	3	129150-11230	SCREW, VALVE ADJUST	6							
29	3	129150-11750	NUT, M8	6							
30	2	22242-000120	RING, 12	2							
31	2	26979-050162	SCREW, M5X16	1							
32	1	26106-080402	BOLT, M8X 40 PLATED	3							
33	1	124160-01751	CAP, FILLER	1							
34	1	119515-11380	BONNET ASSY, HEAD	1							
35	2	119717-03031	PLATE, BAFFLE	1							
36	3	119717-03070	BAFFLE, BREATHER	1							
37	2	119717-03070	BAFFLE, BREATHER	2							
38	2	119802-03100	DIAPHRAGM ASSY	1							
39	3	119802-03110	PLATE, DIAPHRAGM	1							
40	3	119802-03121	COVER, DIAPHRAGM	1							
41	3	119802-03131	DIAPHRAGM	1							
42	3	119802-03141	SPRING, DIAPHRAGM	1							
44	2	119515-11310	GASKET, BONNET	1							
45	2	119515-11320	COVER, BONNET	1							
46	2	119515-11330	GASKET	1							
47	2	22857-500100	SCREW, 5X10	4							
48	2	22857-500100	SCREW, 5X10	4							
49	2	22857-500160	SCREW, 5X16	2							
50	1	24311-000320	O-RING, 1AP32.0	1							
51	1	26106-060202	BOLT, M6X 20 PLATED	3							
52	1	26106-060752	BOLT, M6X 75 PLATED	6							
53	1	129900-07900	LIFTER, ENGINE	1							
54	1	26106-080162	BOLT, M8X 16 PLATED	2							
55	1	119717-77801	PLUG, GLOW	3							
56	1	119717-77820	CONNECTOR, GLOW PLUG	1							
57	1	119515-11800	GUIDE, VALVE	6							1

Remarks
(1)Spare parts.

N:Old ◄Yes/No► New. Q:Old ◄No/Yes► New. R:Old ◄Yes/Yes► New. S:Old ◄No/No► New. W:Add. Z:Discontinued. F:Interchangeable by set. K:Q'ty Change

Copyright (C) 2015 YANMAR GLOBAL CS CO., LTD. All RightsReserved.

Fig.5. EXHAUST MANIFOLD

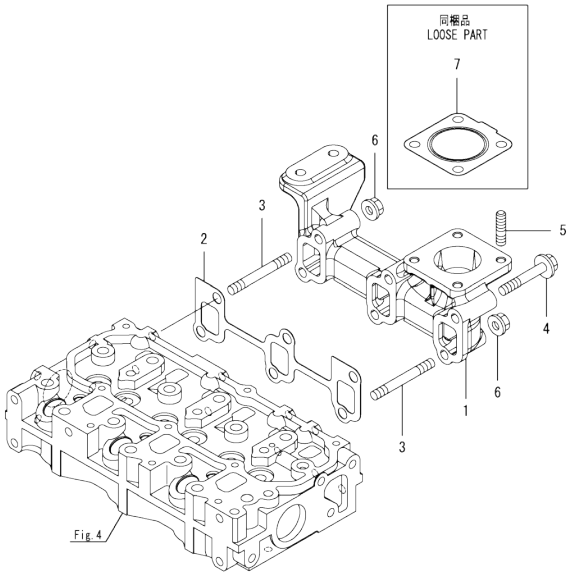

(A)=3TNM74F-SAAY (D)=
(B)= (E)=
(C)= (F)=

No.	Lev.	Parts No.	Description	Q'ty (A)	(B)	(C)	(D)	(E)	(F)	I	R
1	1	119717-13109	MANIFOLD, EXHAUST	1							
2	1	119717-13110	GASKET, EXH.MANIFOLD	1							
3	1	119717-13600	BOLT, STUD M8X50	2							
4	1	129E00-13610	BOLT, M8X50 10.9	4							
5	1	119131-18320	BOLT, STUD M8X22	4							
6	1	26306-080002	NUT, M8	2							
7	1	119515-13200	GASKET, SILENCER	1							

N:Old ◄Yes/No► New. Q:Old ◄No/Yes► New. R:Old ◄Yes/Yes► New. S:Old ◄No/No► New. W:Add. Z:Discontinued. F:Interchangeable by set. K:Q'ty Change

Copyright (C) 2015 YANMAR GLOBAL CS CO., LTD. All RightsReserved.

Fig.6. CAMSHAFT & DRIVING GEAR

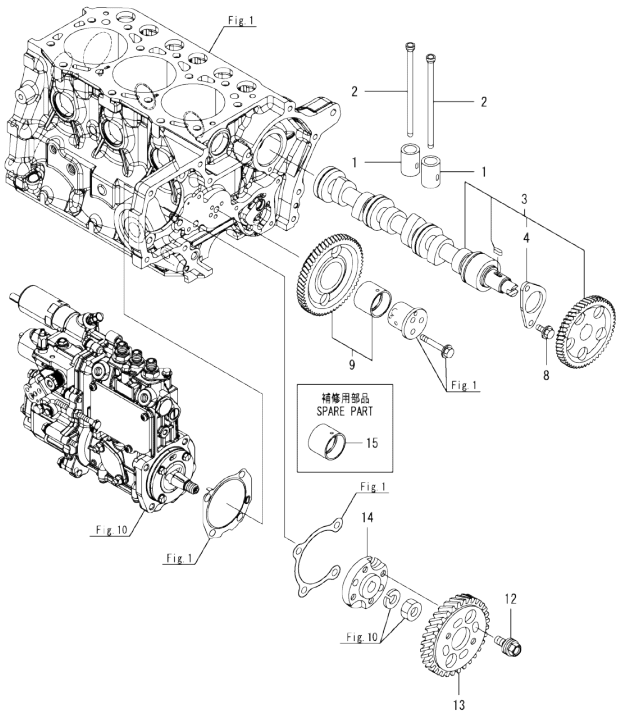

(A)=3TNM74F-SAAY (D)=
(B)= (E)=
(C)= (F)=

No.	Lev.	Parts No.	Description	Q'ty (A)	(B)	(C)	(D)	(E)	(F)	I	R
1	1	119620-14200	TAPPET	6							
2	1	119515-14400	PUSH-ROD	6							
3	1	119025-14580	CAMSHAFT ASSY	1							
4	2	119620-02450	BEARING, THRUST	1							
8	1	26106-060122	BOLT, M6X 12 PLATED	2							
9	1	119025-25100	GEAR ASSY, IDLE	1							
12	1	129150-25301	BOLT	4							
13	1	119125-25930	GEAR, PUMP	1							
14	1	119717-51150	FLANGE	1							
15	1	119125-25910	BUSH, IDLE GEAR	1							1

Remarks
(1)Spare parts.

N:Old $\frac{\text{Yes}}{\text{No}}$ New. Q:Old $\frac{\text{No}}{\text{Yes}}$ New. R:Old $\frac{\text{Yes}}{\text{Yes}}$ New. S:Old $\frac{\text{No}}{\text{No}}$ New. W:Add. Z:Discontinued. F:Interchangeable by set. K:Q'ty Change

Copyright (C) 2015 YANMAR GLOBAL CS CO., LTD. All RightsReserved.

Fig.7. CRANKSHAFT & PISTON

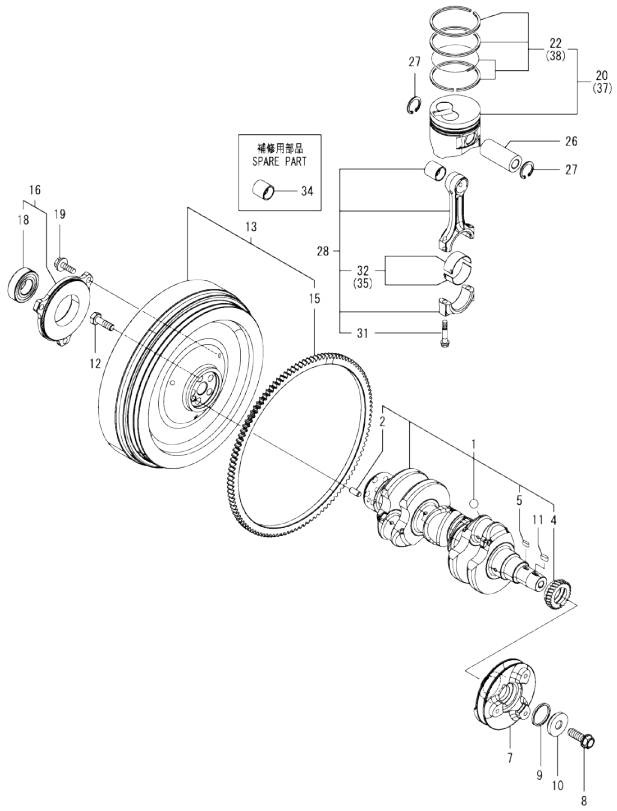

(A)=3TNM74F-SAAY (D)=
(B)= (E)=
(C)= (F)=

No.	Lev.	Parts No.	Description	Q'ty (A)	(B)	(C)	(D)	(E)	(F)	I	R
1	1	119D00-21700	CRANKSHAFT ASSY	1							
2	2	129100-01580	PIN, PARALLEL 8X16	1							
4	2	119125-21200	GEAR, CRANKSHAFT	1							
5	2	22512-040120	KEY, 4X 12	1							
7	1	119125-21660	V-PULLEY, CRANKSHAFT	1							
8	1	119621-21681	BOLT, FLANGE 12X1.25	1							
9	1	119C10-21930	GASKET, WASHER	1							
10	1	119C10-21940	WASHER, V-PULLEY	1							
11	1	22512-050120	KEY, 5X 12	1							
12	1	121111-21501	BOLT, FLYWHEEL	5							
13	1	119D00-21580	FLYWHEEL ASSY	1							
15	2	119865-21600	GEAR, RING Z=116	1							
16	1	119888-21450	RETAINER, BEARING	1							
18	2	24104-062054	BEARING, BALL 6205UU	1							
19	1	26106-080222	BOLT, M8X 22 PLATED	3							
20	1	119D00-22080	PISTON ASSY	3							
22	2	119C10-22500	RING ASSY	3							
26	1	119717-22300	PIN, PISTON	3							
27	1	22252-000220	RING, 22	6							
28	1	119515-23000	ROD ASSY, CONNECTING	3							
31	2	119717-23200	BOLT, CONNECTING ROD	6							
32	2	119515-23601	BEARING, CRANK PIN	3							
34	1	119717-23910	BEARING, PISTON PIN	3							1
35	1	119515-23611	BEARING ASSY, 0.25	3							2
37	1	119D00-22900	PISTON ASSY, 0.25 OS	3							3
38	2	119C10-22550	RING ASSY ,0.25	3							3

Remarks
(1)Spare parts.
(2)Under-sized(U.S.=0.25) parts.
(3)Over-sized(O.S.=0.25) parts.

N:Old ←Yes/No→ New. Q:Old ←No/Yes→ New. R:Old ←Yes/Yes→ New. S:Old ←No/No→ New. W:Add. Z:Discontinued. F:Interchangeable by set. K:Q'ty Change

Copyright (C) 2015 YANMAR GLOBAL CS CO., LTD. All RightsReserved.

Fig.8. LUB. OIL SYSTEM

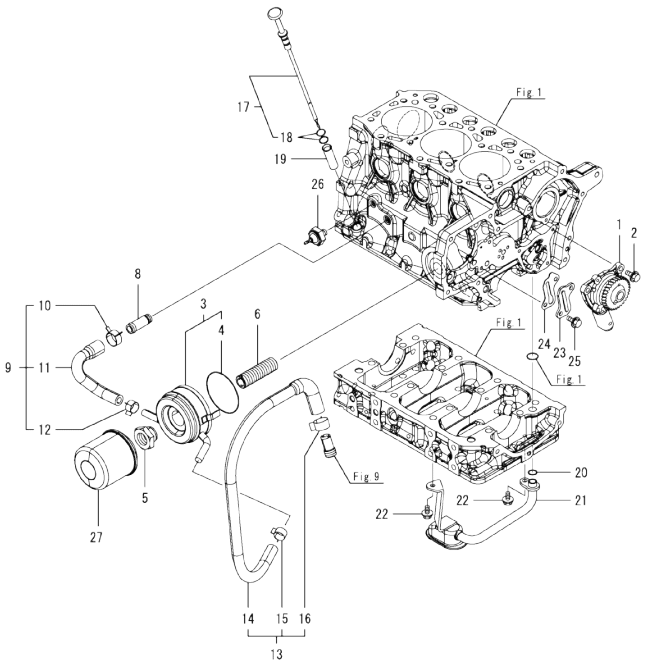

(A)=3TNM74F-SAAY
(B)=
(C)=
(D)=
(E)=
(F)=

No.	Lev.	Parts No.	Description	Q'ty (A)	(B)	(C)	(D)	(E)	(F)	I	R
1	1	119125-32000	PUMP ASSY, OIL	1							
2	1	26106-060142	BOLT, M6X 14 PLATED	3							
3	1	119717-33010	COOLER, OIL	1							
4	2	129508-33050	O-RING	1							
5	1	129417-33111	NUT, OIL COOLER	1							
6	1	129417-35150	BOLT, STUD M20X67	1							
8	1	129122-44480	JOINT	1							
9	1	119027-49020	PIPE ASSY, WATER	1							
10	2	171008-03990	CLAMP, HOSE 18.5	1							
11	2	119027-49010	PIPE,WATER COOLER IN	1							
12	2	23080-015000	CLAMP, 15	1							
13	1	119743-49030	PIPE ASSY, CW	1							
14	2	119743-49010	PIPE, WATER	1							
15	2	23080-015000	CLAMP, 15	1							
16	2	23080-018000	CLAMP, 18	1							
17	1	119025-34800	DIPSTICK, OIL	1							
18	2	119125-34900	O-RING	2							
19	1	119125-34810	GUIDE, DIPSTICK	1							
20	1	119209-35030	O-RING, P11	1							
21	1	119025-35080	PIPE ASSY, OIL INLET	1							
22	1	26106-060102	BOLT, M6X 10 PLATED	2							
23	1	119125-39200	COVER	1							
24	1	119125-39220	GASKET, OIL-PIPE	1							
25	1	26106-060122	BOLT, M6X 12 PLATED	2							
26	1	114250-39450	SWITCH, HYDRAULIC	1							
27	1	119305-35151	FILTER ASSY, D68XL65	1							1

Remarks
(1)Spare parts.

N:Old ←Yes/No→ New. Q:Old ←No/Yes→ New. R:Old ←Yes/Yes→ New. S:Old ←No/No→ New. W:Add. Z:Discontinued. F:Interchangeable by set. K:Q'ty Change

Copyright (C) 2015 YANMAR GLOBAL CS CO., LTD. All RightsReserved.

Fig.9. COOLING WATER SYSTEM

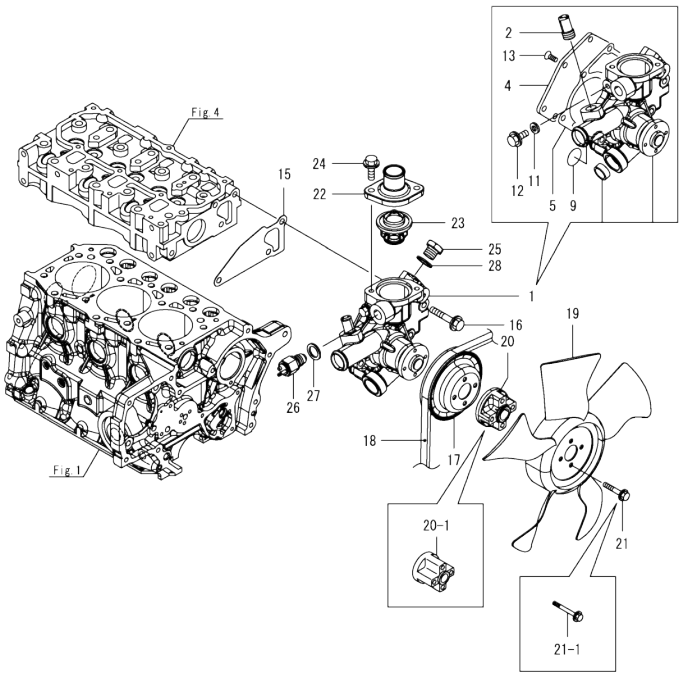

(A)=3TNM74F-SAAY (D)=
(B)= (E)=
(C)= (F)=

No.	Lev.	Parts No.	Description	Q'ty (A)	(B)	(C)	(D)	(E)	(F)	I	R
1	1	119027-42000	PUMP ASSY, CW	1							
2	2	121851-11970	JOINT, PIPE	1							
4	2	119025-42020	COVER	1							
5	2	119025-42030	GASKET, WATER PUMP	1							
9	2	119685-42281	O-RING	1							
11	2	23414-080000	GASKET, 8X1.0	1							
12	2	26106-080122	BOLT, M8X 12 PLATED	1							
13	2	26577-060122	SCREW, M6X12	5							
15	1	119515-42020	GASKET, WATER PUMP	1							
16	1	26106-080452	BOLT, M8X 45 PLATED	3							
17	1	119717-42350	V-PULLEY, D=100	1							
18	1	25132-003500	V-BELT, A35	1							
19	1	119258-44740	FAN, COOLING D300	1							
20	1	171353-44760	SPACER, FAN	1							
20-1	1	119256-44760	SPACER, FAN	1						N	
	(A=E004504)										
21	1	26106-060352	BOLT, M6X 35 PLATED	4							
21-1	1	26106-060552	BOLT, M6X 55 PLATED	4						N	
	(A=E004504)										
22	1	129350-49530	COVER, THERMOSTAT	1							
23	1	119717-49800	THERMOSTAT, 71C	1							
24	1	26106-080202	BOLT, M8X 20 PLATED	2							
25	1	121450-42450	PLUG, M16	1							
26	1	121250-44901	SWITCH, THERMO 110	1							
27	1	124465-44950	GASKET, 16	1							
28	1	124465-44950	GASKET, 16	1							

N:Old ←Yes/No→ New. Q:Old ←No/Yes→ New. R:Old ←Yes/Yes→ New. S:Old ←No/No→ New. W:Add. Z:Discontinued. F:Interchangeable by set. K:Q'ty Change

Copyright (C) 2015 YANMAR GLOBAL CS CO., LTD. All RightsReserved.

Fig.10. FUEL INJECTION PUMP

(A)=3TNM74F-SAAY
(B)=
(C)=
(D)=
(E)=
(F)=

No.	Lev.	Parts No.	Description	Q'ty (A)	(B)	(C)	(D)	(E)	(F)	I	R
1	1	719D25-51310	FIE ASSY	1							1
5	2	129155-51020	BOLT, STUD	2							
8	2	122710-51090	FEATHER KEY,WOODRUFF	1							
18	2	129155-51280	O-RING, S6	1							
31	2	129155-51400	DEFLECTOR	1							
32	2	158600-51410	PLUG, DEFLECTOR	1							
33	2	119717-51420	O-RING	1							
34	2	158600-51420	PLUG, DEFLECTOR	1							
43	2	158600-51570	PLUG, RACK	1							
44	2	129155-51580	O-RING	1							
77	2	119125-51700	COVER, PUMP	1							
78	2	119717-51711	GASKET	1							
79	2	119717-51750	COVER	1							
80	2	119717-51761	GASKET	1							
81	2	158600-51790	STOPPER, RACK	1							
83	2	22190-160002	WASHER, SEAL 16	1							
84	2	22217-120000	WASHER, SPRING 12	1							
85	2	22351-050010	PIN, SPRING 5.0X10	2							
89	2	26022-050122	SCREW, M5X12	8							
91	2	26716-120002	NUT, M12	1							
94	2	119717-51860	NUT, M6	2							
97	2	129155-52051	GASKET	1							
98	2	129100-52200	COVER, PUMP	1							
100	1	119D00-51250	SUPPORT,FOP	1							
101	1	26106-080162	BOLT, M8X 16 PLATED	1							
102	1	26106-080162	BOLT, M8X 16 PLATED	1							

Remarks
(1)Governor(Fig.11) is incorporated in this Fuel Injection Pump(No.1).

N:Old ←Yes/No→ New. Q:Old ←No/Yes→ New. R:Old ←Yes/Yes→ New. S:Old ←No/No→ New. W:Add. Z:Discontinued. F:Interchangeable by set. K:Q'ty Change

Copyright (C) 2015 YANMAR GLOBAL CS CO., LTD. All RightsReserved.

Fig.11. GOVERNOR

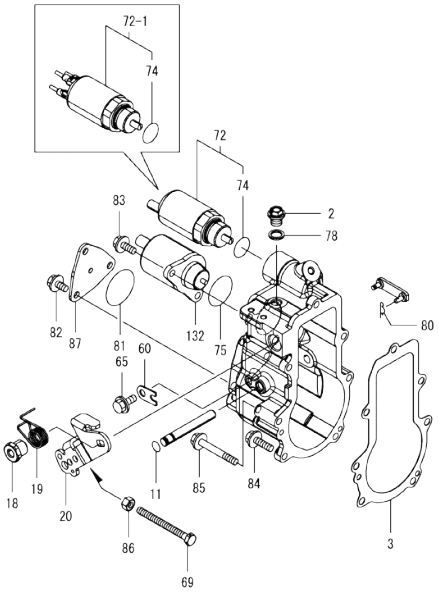

(A)=3TNM74F-SAAY (D)=
(B)= (E)=
(C)= (F)=

No.	Lev.	Parts No.	Description	Q'ty (A)	(B)	(C)	(D)	(E)	(F)	I	R
2	2	119717-51930	PLUG, M10	1							
3	2	119717-61050	GASKET	1							
11	2	129155-51280	O-RING, S6	1							
18	2	129255-61410	NUT, M8	1							
19	2	119527-61420	SPRING, LEVER	1							
20	2	119515-61440	LEVER, CONTROL	1							
60	2	119660-61901	STOPPER, SHAFT	1							
65	2	26106-060102	BOLT, M6X 10 PLATED	1							
69	2	171353-61460	BOLT, IDLE	1							
72	2	119C00-61900	SOLENOID, POWER CONT	1							
72-1	2	119C00-61901	SOLENOID, POWER CONT	1							R
	(A=E19112)										
74	3	24357-240200	PACKING, 24020	1							
75	2	158552-61900	O-RING	1							
78	2	22190-100002	WASHER, SEAL 10	1							
80	2	22372-040000	PIN, SNAP 4	1							
81	2	24341-000360	O-RING, 1AS36.0	1							
82	2	26106-060102	BOLT, M6X 10 PLATED	3							
83	2	26106-060142	BOLT, M6X 14 PLATED	2							
84	2	26106-060202	BOLT, M6X 20 PLATED	4							
85	2	26106-060452	BOLT, M6X 45 PLATED	3							
86	2	26756-060002	NUT, LOCK M6	1							
87	2	158563-61060	COVER, GOVERNOR CASE	1							
132	2	119233-77932	SOLENOID, STOP	1							

Remarks
* This figure(Governor) is incorporated in the Fuel Injection Pump(Fig.10).

N:Old ←Yes/No→ New. Q:Old ←No/Yes→ New. R:Old ←Yes/Yes→ New. S:Old ←No/No→ New. W:Add. Z:Discontinued. F:Interchangeable by set. K:Q'ty Change

Copyright (C) 2015 YANMAR GLOBAL CS CO., LTD. All RightsReserved.

Fig.12. FUEL INJECTION VALVE

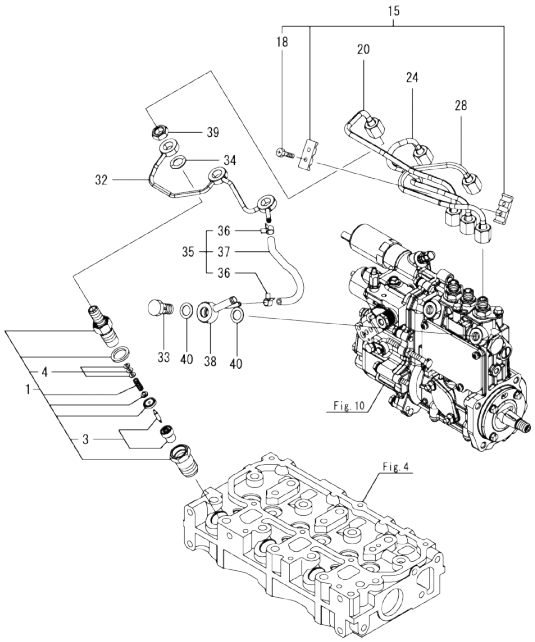

Remarks
(1)Spare parts.

(A)=3TNM74F-SAAY
(B)=
(C)=
(D)=
(E)=
(F)=

No.	Lev.	Parts No.	Description	Q'ty (A)	(B)	(C)	(D)	(E)	(F)	I	R
1	1	119C10-53000	NOZZLE ASSY, F.I.	3							
3	2	119C10-53010	NOZZLE ASSY	3							
4	2	129901-53800	SHIM SET, ADJUSTING	3							1
15	1	129150-59120	RETAINER, PIPE	1							
18	2	129150-59131	BOLT, M4X14	2							
20	1	119D00-59810	PIPE ASSY,INJ,NO1	1							
24	1	119D00-59820	PIPE ASSY,INJ,NO2	1							
28	1	119D00-59830	PIPE ASSY,INJ,NO3	1							
32	1	119D00-59540	PIPE ASSY, FO RETURN	1							
33	1	119125-59560	BOLT, PIPE JOINT	1							
34	1	129901-59560	GASKET	3							
35	1	119125-59570	HOSE ASSY, RETURN	1							
36	2	124066-59100	CLAMP, HOSE 8	2							
37	2	119000-59550	HOSE, FUEL RETURN	1							
38	1	119840-59570	JOINT	1							
39	1	119620-59700	NUT, NOZZLE	3							
40	1	22190-120002	WASHER, SEAL 12	2							

N:Old ←Yes/No→ New. Q:Old ←No/Yes→ New. R:Old ←Yes/Yes→ New. S:Old ←No/No→ New. W:Add. Z:Discontinued. F:Interchangeable by set. K:Q'ty Change

Copyright (C) 2015 YANMAR GLOBAL CS CO., LTD. All RightsReserved.

Fig.13. FUEL PIPE

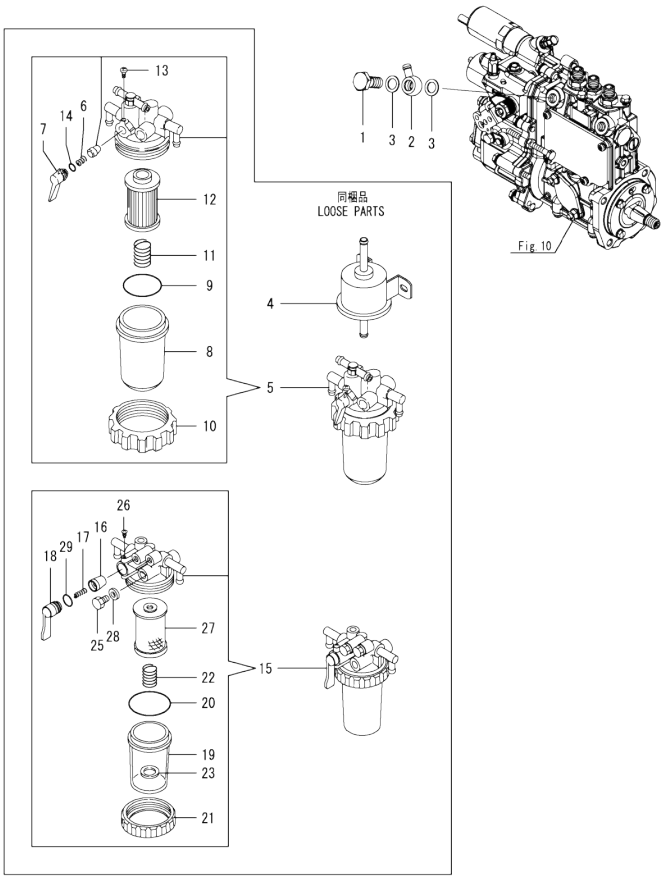

(A)=3TNM74F-SAAY (D)=
(B)= (E)=
(C)= (F)=

No.	Lev.	Parts No.	Description	Q'ty (A)	(B)	(C)	(D)	(E)	(F)	I	R
1	1	103854-39140	BOLT, PIPE JOINT	1							
2	1	101304-59020	JOINT, PIPE 12	1							
3	1	22190-120002	WASHER, SEAL 12	2							
4	1	119225-52102	PUMP, FUEL FEED	1							
5	1	119833-55621	FILTER ASSY, FUEL	1							
6	2	104200-55330	SPRING, FUEL VALVE	1							
7	2	119810-55340	LEVER, FUEL	1							
8	2	121254-55510	CUP, FUEL STARINER	1							
9	2	102103-55520	O-RING	1							
10	2	110250-55610	RING, CUP RETAINING	1							
11	2	121250-55620	SPRING, ELEMENT	1							
12	2	119810-55650	ELEMENT	1							
13	2	104200-55750	SCREW, PAN M4	1							
14	2	24311-240100	O-RING, 1AP10A	1							
15	1	129335-55701	SEPARATOR ASSY,WATER	1							
16	2	104200-55321	VALVE, TAPER	1							
17	2	104200-55330	SPRING, FUEL VALVE	1							
18	2	104200-55341	HANDLE, COCK	1							
19	2	124064-55510	CUP, FUEL STARINER	1							
20	2	102103-55520	O-RING	1							
21	2	110250-55610	RING, CUP RETAINING	1							
22	2	121257-55720	SPRING, FILTER	1							
23	2	121257-55731	FLOAT	1							
25	2	101720-55750	PLUG, HEXAGON M6	2							
26	2	104200-55750	SCREW, PAN M4	1							
27	2	171081-55910	FILTER, FUEL	1							
28	2	23418-060000	GASKET, 6X1.0	2							
29	2	24311-240100	O-RING, 1AP10A	1							

N:Old ←Yes/No→ New. Q:Old ←No/Yes→ New. R:Old ←Yes/Yes→ New. S:Old ←No/No→ New. W:Add. Z:Discontinued. F:Interchangeable by set. K:Q'ty Change

Copyright (C) 2015 YANMAR GLOBAL CS CO., LTD. All RightsReserved.

Fig.14. STARTER MOTOR

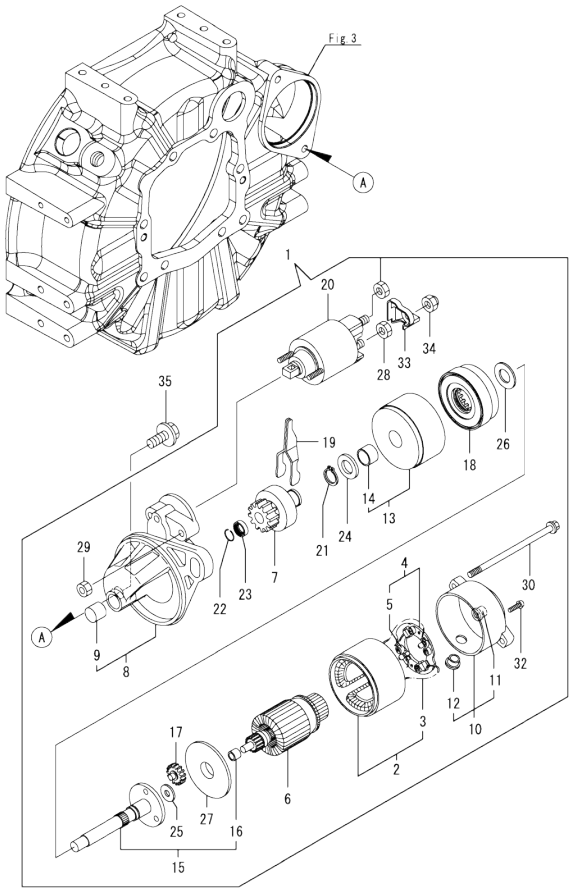

0CD50-M01130 Fig.14

(A)=3TNM74F-SAAY (D)=
(B)= (E)=
(C)= (F)=

No.	Lev.	Parts No.	Description	Q'ty (A)	(B)	(C)	(D)	(E)	(F)	I	R
1	1	119515-77010	STARTER ASSY	1							
2	2	X0281007680	YOKE ASSY	1							
3	3	X0280996180	STARTER KIT	2							
4	2	X0285105190	HOLDER ASSY	1							
5	3	X0285205030	SPRING	4							
6	2	X0282005871	ARMATURE ASSY	1							
7	2	X0283006960	CLUTCH ASSY	1							
8	2	X4284001590	HOUSING ASSY	1							
9	3	X9491050100	BEARING, NEEDLE	1							
10	2	X0285007030	FRAME ASSY	1							
11	3	X9491040990	BEARING	1							
12	3	X0280626010	COVER	1							
13	2	X0284105040	BEARING ASSY	1							
14	3	X9491034330	BEARING	1							
15	2	X0286105010	SHAFT ASSY	1							
16	3	X9491034320	BEARING	1							
17	2	X0286305010	GEAR	3							
18	2	X0286355010	GEAR	1							
19	2	X0287405140	LEVER	1							
20	2	X0534007800	SWITCH ASSY	1							
21	2	X9055715000	RING	1							
22	2	X9490721360	RING	1							
23	2	X0280210331	NUT	1							
24	2	X9490138110	WASHER	1							
25	2	X9490138090	WASHER	1							
26	2	X9490138100	WASHER	1							
27	2	X0284525010	PLATE	1							
28	2	X9490562360	NUT	1							
29	2	X9490560750	NUT	2							
30	2	X9490423520	BOLT, THROUGH	2							
32	2	X9490065670	SCREW, M4X6	2							
33	2	X0280335360	COVER, TERMINAL	1							
34	2	X1289510130	NUT	1							
35	1	26106-100252	BOLT, M10X 25 PLATED	2							

N:Old ←Yes/No→ New. Q:Old ←No/Yes→ New. R:Old ←Yes/Yes→ New. S:Old ←No/No→ New. W:Add. Z:Discontinued. F:Interchangeable by set. K:Q'ty Change

Copyright (C) 2015 YANMAR GLOBAL CS CO., LTD. All RightsReserved.

Fig.15. GENERATOR

(A)=3TNM74F-SAAY
(B)=
(C)=
(D)=
(E)=
(F)=

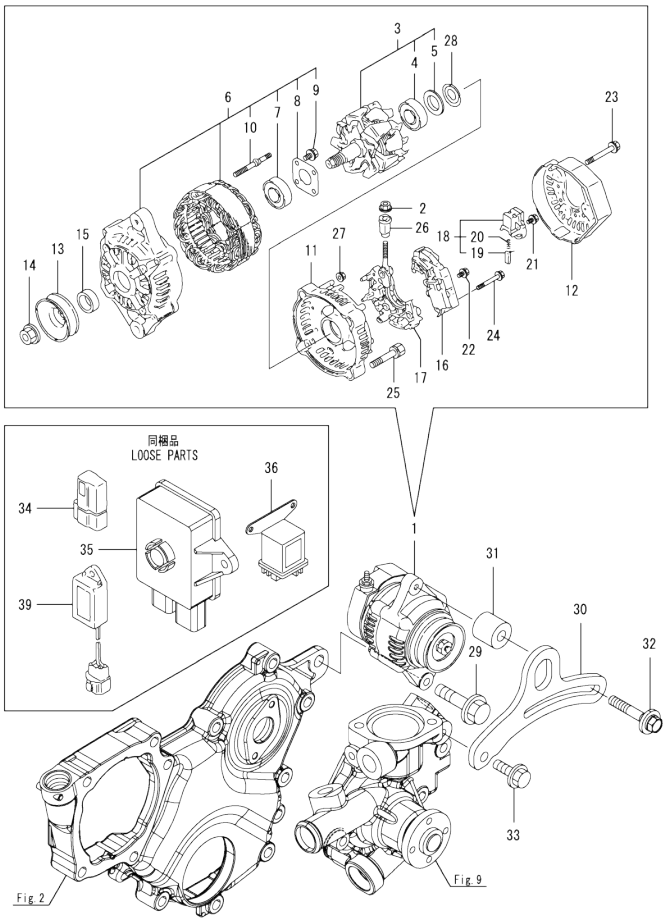

No.	Lev.	Parts No.	Description	Q'ty (A)	(B)	(C)	(D)	(E)	(F)	I	R
1	1	129423-77200	GENERATOR ASSY, 40A	1							
2	2	X9490561001	NUT	1							
3	2	119620-77380	ROTOR ASSY	1							
4	3	123501-79240	BEARING, BALL	1							
5	3	119620-79250	COVER, BEARING	1							
6	2	119620-77421	FRAME ASSY,GENERATOR	1							
7	3	119620-79200	BEARING, BALL	1							
8	3	119620-79210	RETAINER	1							
9	3	119620-79220	SCREW	4							
10	3	119620-79230	BOLT, STUD	2							
11	2	119620-77440	FRAME ASSY	1							
12	2	129240-79300	COVER	1							
13	2	119620-77461	PULLEY, GENERATOR	1							
14	2	119620-77471	NUT	1							
15	2	119620-77490	COLLAR	1							
16	2	129423-77710	REGULATOR ASSY	1							
17	2	119620-79260	HOLDER	1							
18	2	129052-79270	HOLDER, BRUSH	1							
19	3	119620-77480	BRUSH	2							
20	3	119620-79280	SPRING	2							
21	2	119620-79290	SCREW	6							
22	2	119620-79300	SCREW	1							
23	2	119620-79310	BOLT	3							
24	2	119620-79320	SCREW	2							
25	2	119620-79330	BOLT	2							
26	2	119620-79340	BUSH, INSULATION	1							
27	2	119620-79350	NUT	2							
28	2	119620-79360	WASHER, THRUST	1							
29	1	26106-100402	BOLT, M10X 40 PLATED	1							
30	1	119125-77320	ADJUSTER, BELT	1							
31	1	124732-77340	SPACER	1							
32	1	129972-77341	BOLT, ADJUST L=50	1							
33	1	26106-080202	BOLT, M8X 20 PLATED	1							
34	1	119643-66900	DIODE	1							
35	1	119C10-77600	DRIVER	1							
36	1	119650-77911	RELAY ASSY, GLOW	1							
39	1	129211-77920	TIMER	1							

N:Old ←Yes/No→ New. Q:Old ←No/Yes→ New. R:Old ←Yes/Yes→ New. S:Old ←No/No→ New. W:Add. Z:Discontinued. F:Interchangeable by set. K:Q'ty Change

Copyright (C) 2015 YANMAR GLOBAL CS CO., LTD. All RightsReserved.

Parts No. Index

Parts No.	Fig. No.	Ref. No.
101304-59020	13	2
101720-55750	13	25
102103-55520	13	9
		20
103854-39140	13	1
104200-55321	13	16
104200-55330	13	6
		17
104200-55341	13	18
104200-55750	13	13
		26
105010-11490	4	3
105425-01690	3	8
106760-01770	2	6
110250-55610	13	10
		21
114250-39450	8	26
119000-59550	12	37
119025-01530	2	1
119025-01770	3	7
119025-14580	6	3
119025-25100	6	9
119025-34800	8	17
119025-35080	8	21
119025-42020	9	4
119025-42030	9	5
119027-42000	9	1
119027-49010	8	11
119027-49020	8	9
119125-01750	2	2
119125-01780	3	11
119125-01790	1	32
119125-01800	1	33
119125-01960	1	7
119125-01970	1	5
119125-02061	1	9
119125-02900	1	36
119125-02910	1	39
119125-02930	1	23
119125-02940	1	42
119125-21200	7	4
119125-21660	7	7
119125-25050	1	26
119125-25910	6	15
119125-25930	6	13
119125-32000	8	1
119125-34810	8	19
119125-34900	8	18
119125-39200	8	23
119125-39220	8	24

Parts No.	Fig. No.	Ref. No.
119125-51700	10	77
119125-51800	1	35
119125-59560	12	33
119125-59570	12	35
119125-77320	15	30
119131-18320	5	5
119209-35030	8	20
119225-52102	13	4
119233-77932	11	132
119256-44760	9	20 -1
119258-44740	9	19
119285-11990	4	11
119305-35151	8	27
119515-11200	4	20
119515-11240	4	21
119515-11280	4	25
119515-11310	4	44
119515-11320	4	45
119515-11330	4	46
119515-11380	4	34
119515-11800	4	57
119515-13200	5	7
119515-14400	6	2
119515-23000	7	28
119515-23601	7	32
119515-23611	7	35
119515-42020	9	15
119515-61440	11	20
119515-77010	14	1
119527-61420	11	19
119600-11460	4	2
119620-01620	1	13
119620-01750	3	5
119620-02450	6	4
119620-14200	6	1
119620-59700	12	39
119620-77380	15	3
119620-77421	15	6
119620-77440	15	11
119620-77461	15	13
119620-77471	15	14
119620-77480	15	19
119620-77490	15	15
119620-79200	15	7
119620-79210	15	8
119620-79220	15	9
119620-79230	15	10
119620-79250	15	5
119620-79260	15	17
119620-79280	15	20

Parts No.	Fig. No.	Ref. No.
119620-79290	15	21
119620-79300	15	22
119620-79310	15	23
119620-79320	15	24
119620-79330	15	25
119620-79340	15	26
119620-79350	15	27
119620-79360	15	28
119621-21681	7	8
119643-66900	15	34
119650-77911	15	36
119660-61901	11	60
119685-42281	9	9
119717-01800	2	3
119717-03031	4	35
119717-03070	4	36
		37
119717-11131	4	15
119717-11190	4	17
119717-11260	4	24
119717-11340	4	18
119717-11350	4	19
119717-11650	4	26
119717-13109	5	1
119717-13110	5	2
119717-13600	5	3
119717-22300	7	26
119717-23200	7	31
119717-23910	7	34
119717-33010	8	3
119717-42350	9	17
119717-49800	9	23
119717-51150	6	14
119717-51420	10	33
119717-51711	10	78
119717-51750	10	79
119717-51761	10	80
119717-51860	10	94
119717-51930	11	2
119717-61050	11	3
119717-77801	4	55
119717-77820	4	56
119734-02220	1	34
119743-49010	8	14
119743-49030	8	13
119802-03100	4	38
119802-03110	4	39
119802-03121	4	40
119802-03131	4	41
119802-03141	4	42

Parts No.	Fig. No.	Ref. No.
119810-01200	1	30
119810-55340	13	7
119810-55650	13	12
119833-55621	13	5
119840-59570	12	38
119865-21600	7	15
119888-01850	3	4
119888-21450	7	16
119C00-61900	11	72
119C00-61901	11	72 -1
119C10-01330	1	31
119C10-11100	4	13
119C10-11110	4	14
119C10-21930	7	9
119C10-21940	7	10
119C10-22500	7	22
119C10-22550	7	38
119C10-53000	12	1
119C10-53010	12	3
119C10-77600	15	35
119D00-01560	1	1
119D00-01610	3	2
119D00-11750	4	4
119D00-21580	7	13
119D00-21700	7	1
119D00-22080	7	20
119D00-22900	7	37
119D00-51250	10	100
119D00-59540	12	32
119D00-59810	12	20
119D00-59820	12	24
119D00-59830	12	28
121023-01551	2	8
121111-21501	7	12
121250-44901	9	26
121250-55620	13	11
121254-55510	13	8
121257-55720	13	22
121257-55731	13	23
121450-42450	9	25
121851-11970	9	2
122710-51090	10	8
123501-79240	15	4
124060-01050	1	4
124064-55510	13	19
124066-59100	12	36
124160-01751	4	33
124465-44950	9	27
		28
124732-77340	15	31

Parts No. Index

Parts No.	Fig. No.	Ref. No.
129052-79270	15	18
129100-01580	3	1
	7	2
129100-52200	10	98
129122-44480	8	8
129150-11230	4	27
129150-11750	4	29
129150-25301	6	12
129150-59120	12	15
129150-59131	12	18
129155-51020	10	5
129155-51280	10	18
	11	11
129155-51400	10	31
129155-51580	10	44
129155-52051	10	97
129211-77920	15	39
129240-79300	15	12
129255-61410	11	18
129335-55701	13	15
129350-49530	9	22
129417-33111	8	5
129417-35150	8	6
129423-77200	15	1
129423-77710	15	16
129508-11180	4	16
129508-33050	8	4
129900-07900	4	53
129900-32040	1	27
129901-11450	4	1
129901-53800	12	4
129901-59560	12	34
129972-77341	15	32
129E00-13610	5	4
158552-61900	11	75
158563-61060	11	87
158600-51410	10	32
158600-51420	10	34
158600-51570	10	43
158600-51790	10	81
171008-03990	8	10
171081-55910	13	27
171353-44760	9	20
171353-61460	11	69
22190-100002	11	78
22190-120002	12	40
	13	3
22190-160002	3	10
	10	83
22217-120000	10	84

Parts No.	Fig. No.	Ref. No.
22242-000120	4	30
22252-000220	7	27
22351-050010	10	85
22351-060012	1	28
22372-040000	11	80
22512-040120	7	5
22512-050120	7	11
22857-500100	4	47
		48
22857-500160	4	49
23080-015000	8	12
		15
23080-018000	8	16
23414-080000	9	11
23418-060000	13	28
23876-005000	1	10
	4	12
24104-062054	7	18
24311-000180	2	7
24311-000320	4	50
24311-240100	13	14
		29
24341-000240	2	9
24341-000360	11	81
24357-240200	11	74
25132-003500	9	18
26022-050122	10	89
26106-060102	8	22
	11	65
		82
26106-060122	6	8
	8	25
26106-060142	8	2
	11	83
26106-060162	2	10
26106-060202	4	51
	11	84
26106-060352	9	21
26106-060402	1	29
26106-060452	11	85
26106-060552	9	21 -1
26106-060752	4	52
26106-080122	9	12
26106-080162	4	54
	10	101
		102
26106-080202	9	24
	15	33
26106-080222	7	19
26106-080352	2	4

Parts No.	Fig. No.	Ref. No.
26106-080402	4	32
26106-080452	2	5
	9	16
26106-100252	14	35
26106-100402	15	29
26206-100252	3	6
26306-080002	5	6
26577-060122	9	13
26716-120002	10	91
26756-060002	11	86
26979-050162	4	31
27241-300000	1	11
27241-450000	1	12
719D25-51310	10	1
X0280210331	14	23
X0280335360	14	33
X0280626010	14	12
X0280996180	14	3
X0281007680	14	2
X0282005871	14	6
X0283006960	14	7
X0284105040	14	13
X0284525010	14	27
X0285007030	14	10
X0285105190	14	4
X0285205030	14	5
X0286105010	14	15
X0286305010	14	17
X0286355010	14	18
X0287405140	14	19
X0534007800	14	20
X1289510130	14	34
X4284001590	14	8
X9055715000	14	21
X9490065670	14	32
X9490138090	14	25
X9490138100	14	26
X9490138110	14	24
X9490423520	14	30
X9490560750	14	29
X9490561001	15	2
X9490562360	14	28
X9490721360	14	22
X9491034320	14	16
X9491034330	14	14
X9491040990	14	11
X9491050100	14	9

Parts No.	Fig. No.	Ref. No.